CS3003: IT Project Management

Dr Georgios Koutsoukos

giorgios.koutsoukos@rhul.ac.uk

CS3003: IT Project Management

Part 4: The first/basic Project Planning Elements:

Scope *(discussed),*

Time,

Resources,

Communications

CS3003: IT Project Management

Time (Scheduling) Management:
Steps/Overview, Network Diagrams, Gantt Charts, Milestones

Time (Scheduling) Management Steps/Overview

1. Sequence Activities

Identify and document the logical relationships between project activities.

2. Estimate Activity Durations

Estimate the time required to complete each activity in the project.

- **Typically a trade-off between time constraints and resources/skills availability.**
- May also be impacted by other factors (e.g. external dependencies, learning curve, admin tasks/approvals)
- May be adjusted after critical path analysis (to be discussed)

3. Develop Schedule

Calculate the start and end times of the project activities and establish the overall **project schedule Baseline**. The schedule provides a means for evaluating actual progress in time against a predefined objective.

(from ISO21500) "The schedule is established at the activity level, which provides the basis for *assigning resources* and developing the *time-based budget*. Schedule development should continue throughout the project as work progresses, as the project plans change, as anticipated risk events occur or disappear and as new risks are identified. If necessary, duration and resource estimates should be *reviewed* and *revised* to develop an approved project schedule that can serve as the baseline against which progress may be tracked."

Time (Scheduling) Planning: Common Tools

Network diagram

Gantt chart

Project calendar

Milestones

Time (Scheduling) Planning: Network Diagrams and Critical Path Analysis

- A **Network Diagram** shows the chronological relationship between scheduled activities (tasks) (which are typically derived from the WBS).
- Activities are represented by boxes.
- Dependencies are represented by arrows.
- Multiple arrows (dependencies) are possible.

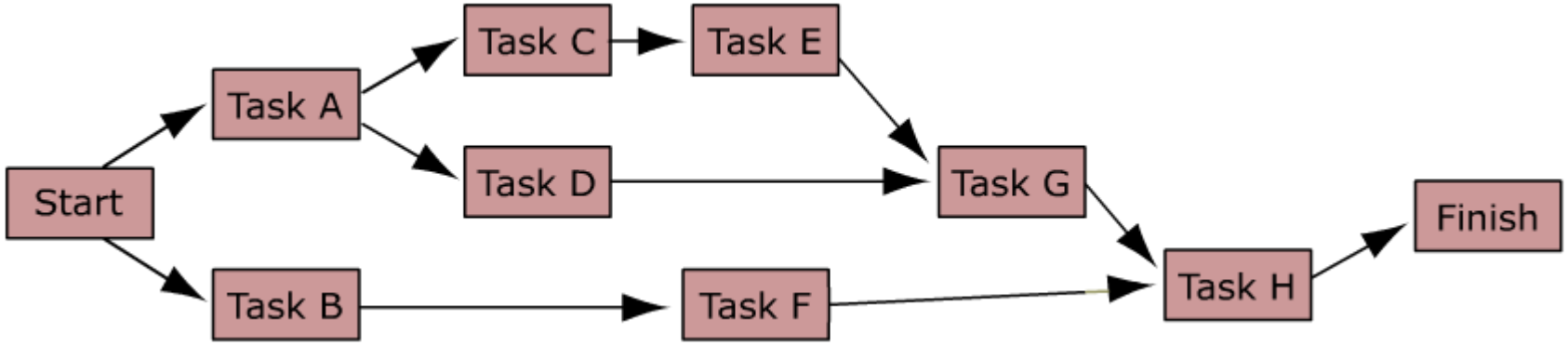

Time (Scheduling) Planning: Network Diagrams and Critical Path Analysis

- **Network Diagram Example**

Activity	Duration (weeks)	Predecessors
A	5	-
B	5	A
C	6	A
D	13	B,C
E	6	B
F	4	D
G	9	C
H	2	E,F,G

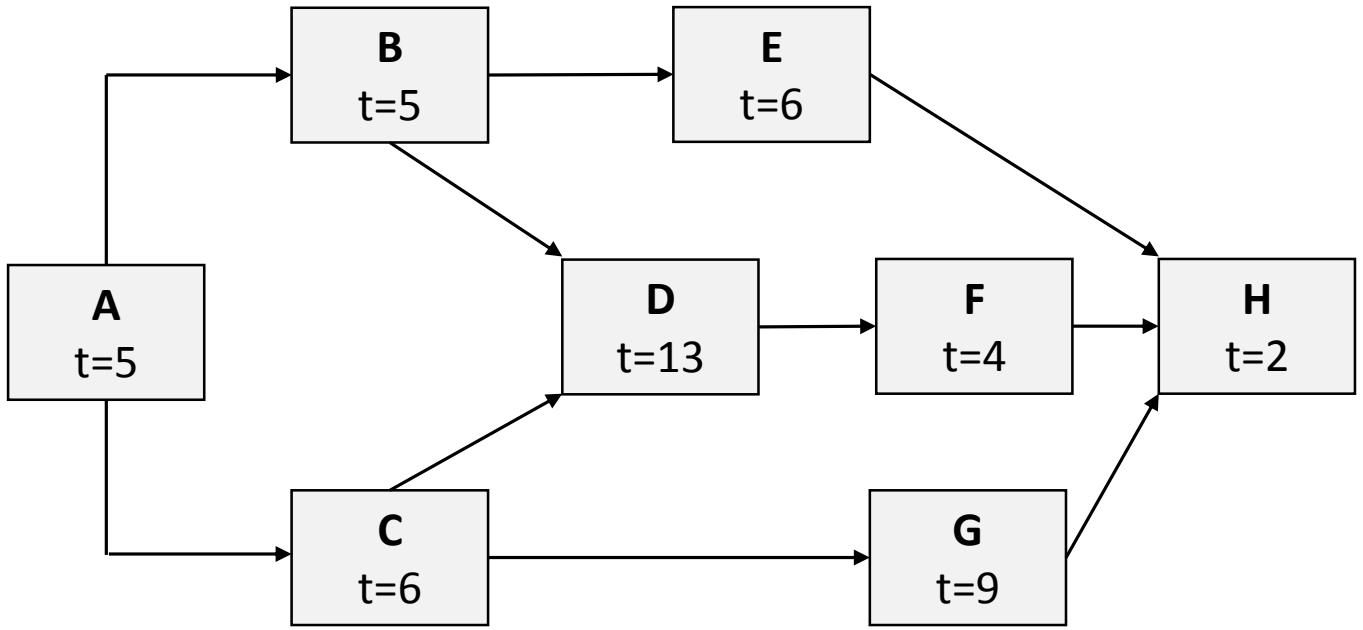

Time (Scheduling) Planning: Network Diagrams and Critical Path Analysis

Key Definitions

- **Early Start (ES)** date: the earliest possible date on which an activity can start (based on predecessors)
- **Late Start (LS)** date: the latest possible date that an activity may begin without delaying the project (or a milestone)
- **Merge Activity:** an activity with two or more immediate predecessors (tasks flowing in)
- **Burst Activity:** an activity with two or more immediate predecessors (tasks flowing out)
- **Float (**aka **Slack, Total Float):** The amount of time an activity may be delayed from its early start without delaying the finish of the project. **Float = (LS-ES) or (LF-EF)**

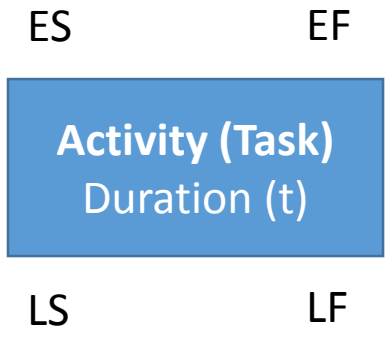

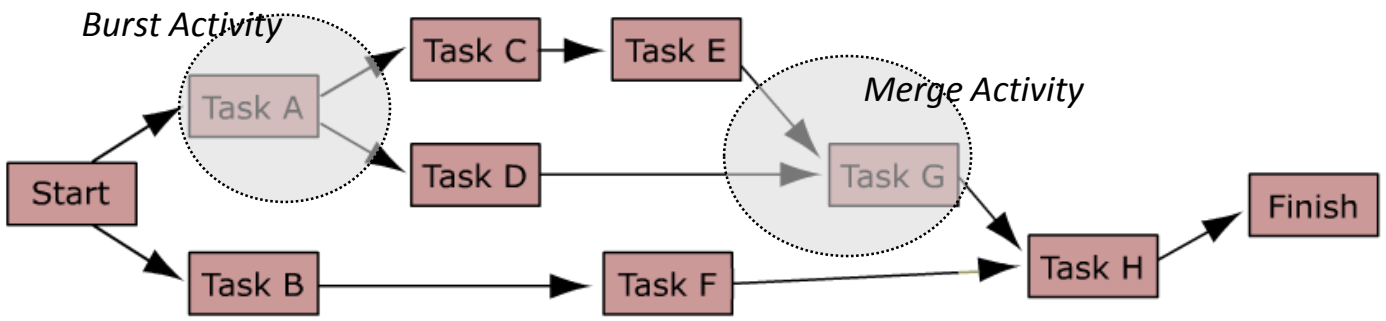

Time (Scheduling) Planning: Network Diagrams and Critical Path Analysis

Uses of Network Diagram

Step	Action	Result
Forward Pass	By path, start at the beginning, add all durations together	Duration of project
Backward Pass	By path, start at the end, subtract all durations	Float
Path Analysis	By path, review each path for least amount of float	Critical path

Time (Scheduling) Planning: Network Diagrams and Critical Path Analysis

Forward Pass

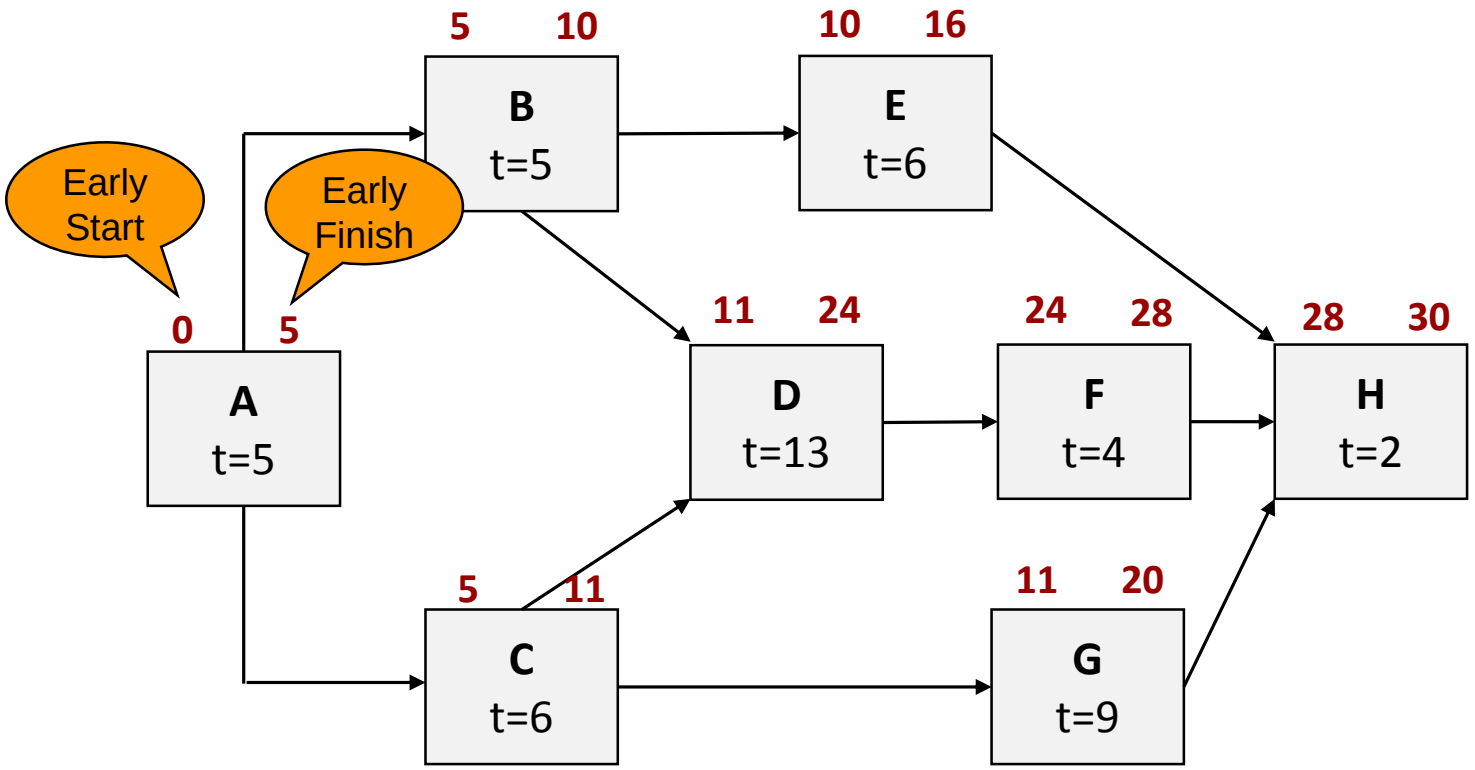

3 Steps to apply the Forward Path:

1. Add all activity times along each path as moving forward (ES + Duration = EF)
2. Carry the EF time to the activity nodes immediately succeeding the recently completed node. The EF becomes the ES of the next node.
3. If the succeeding node is a *merge* point, the *largest* preceding EF becomes the ES for that node.

Time (Scheduling) Planning: Network Diagrams and Critical Path Analysis

Backward Pass

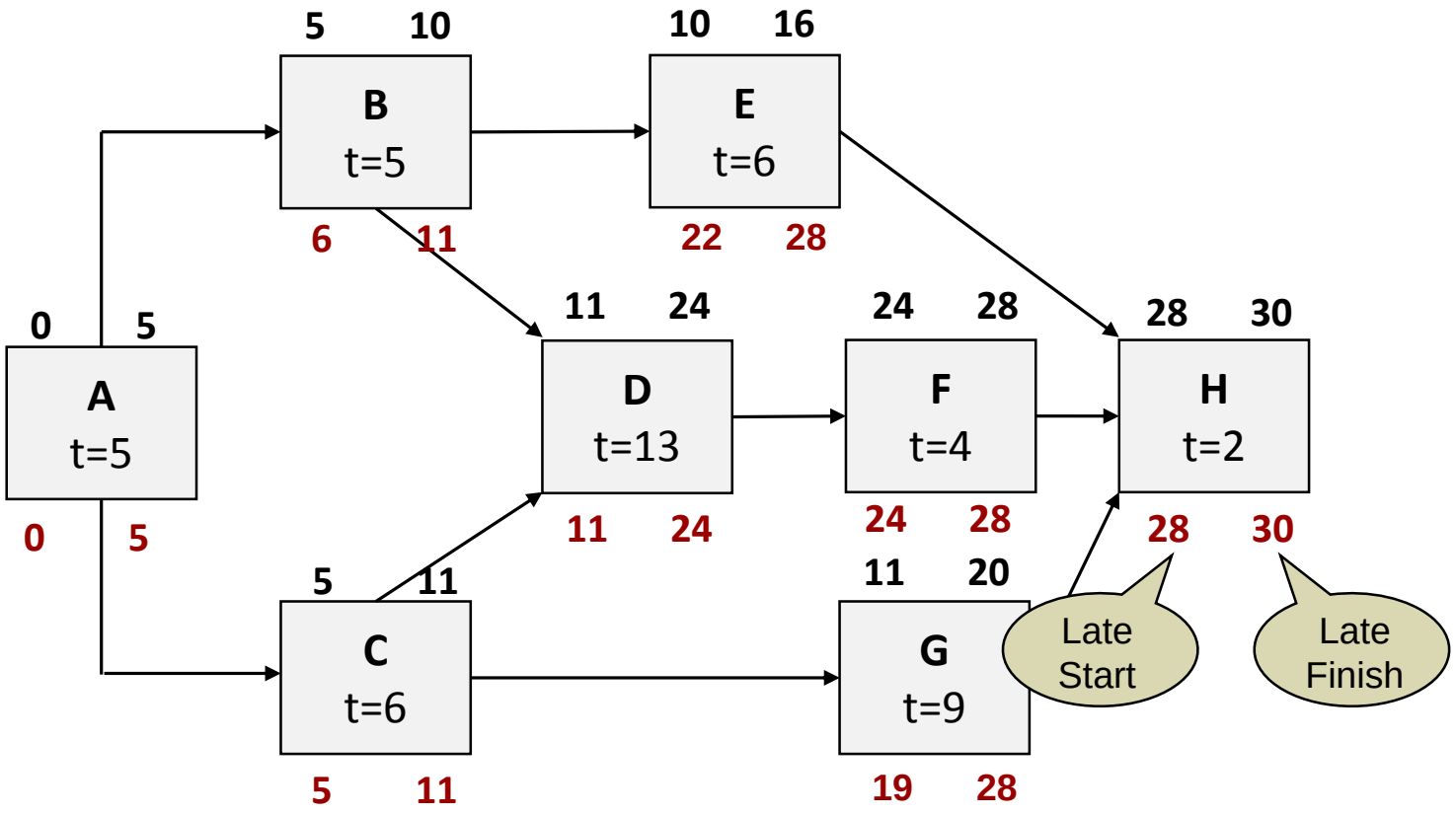

3 Steps to apply the Backward Path:

1. Subtract activity times along each path as moving backward (LF - Duration = LS)
2. Carry back the LS time to the activity nodes immediately preceding the recently completed node. The LS becomes the LF of the next node.
3. If the preceding node is a *burst* point, the *smallest* succeeding LS becomes the LF for that node.

Time (Scheduling) Planning: Network Diagrams and Critical Path Analysis

Determine Float (Slack) and Critical Path

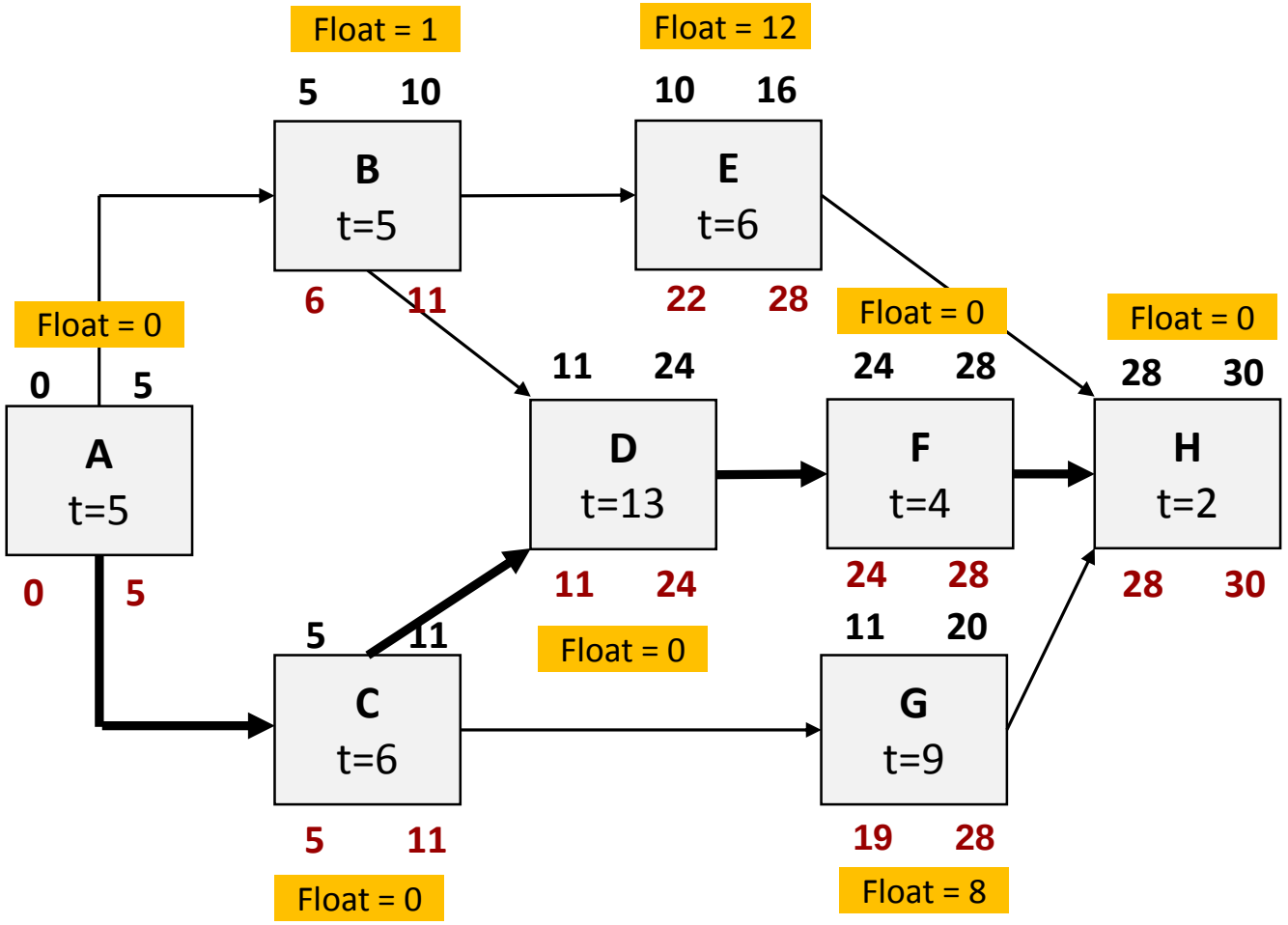

Float (Slack) in each node **= LF-EF or LS-ES**

Critical Path

- Path with the least float/slack time
- Longest of all paths through the project
- Gives the amount of scheduling flexibility…

Example's Critical Path:

A – C – D – F – H

Time (Scheduling) Planning: Network Diagrams and Critical Path Analysis

Critical Path – what does all these mean?

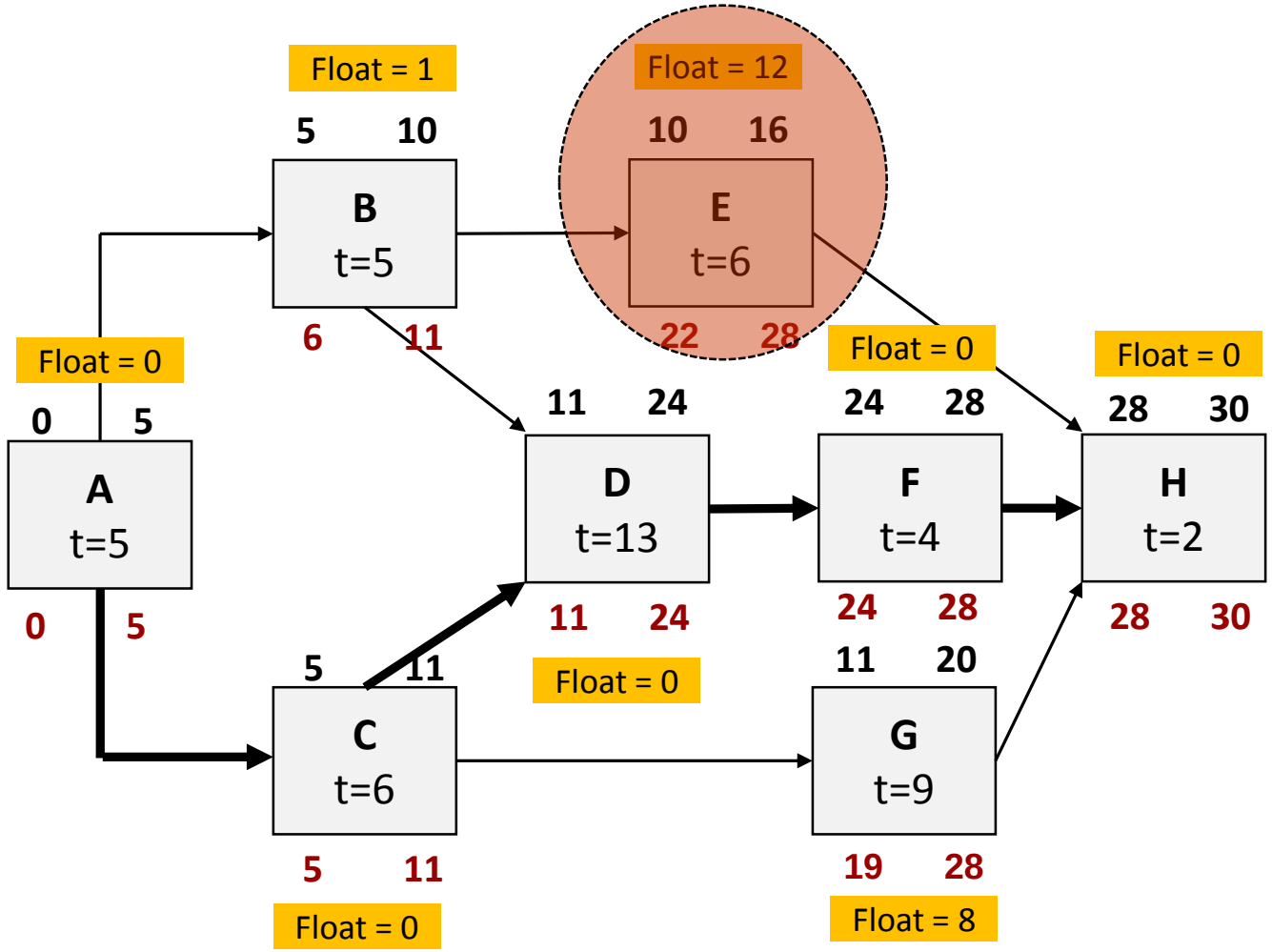

- Lets consider Node E, that has a float of 12. Assume the scenario that activity E is delayed by 10 weeks, i.e. it will start in week No 20 instead of the planned week No 10. There is no implication to the overall schedule.
- However, if the delay is 14 weeks, then ES=24 and EF=30 for E. This means that activity H will have an ES=30 and an EF=32. In other words the project will be delayed by 2 weeks.
- Also, any delay in the critical path implies a delay in the project.
- Path A-B-E-H has a total float of 13 weeks. However, activity B cannot consume more than 1 week of this float because this will impact activity D which is on the critical path.

Note: we have not included "lags" in our examples and diagrams, e.g. commonly "Finish to Start", "Finish to Finish" and "Start to Start".

Time (Scheduling) Planning: Network Diagrams and Critical Path Analysis

Common Options to Shorten the Project/Reduce the Critical Path
1. Eliminate Tasks on the Critical Path
2. Replan Serial Paths to become Parallel
3. Shorten the duration of Critical Path Tasks or of Early tasks
4. Shorten Longest tasks
5. Shorten Easiest Tasks
6. Shorten tasks that cost the least to speed up

Time (Scheduling) Planning: Gantt Charts

Gantt Chart (high-level view)

Activity	Duration (weeks)	Predecessors
T1	2	-
T2	3	
T3	3	T1, T4
T4	2	
T5	2	T2
T6	1	T2
T7	4	T1, T4
T8	5	T1, T4
T9	3	T3, T5
T10	3	T8
T11	2	T9
T12	2	T10, T11

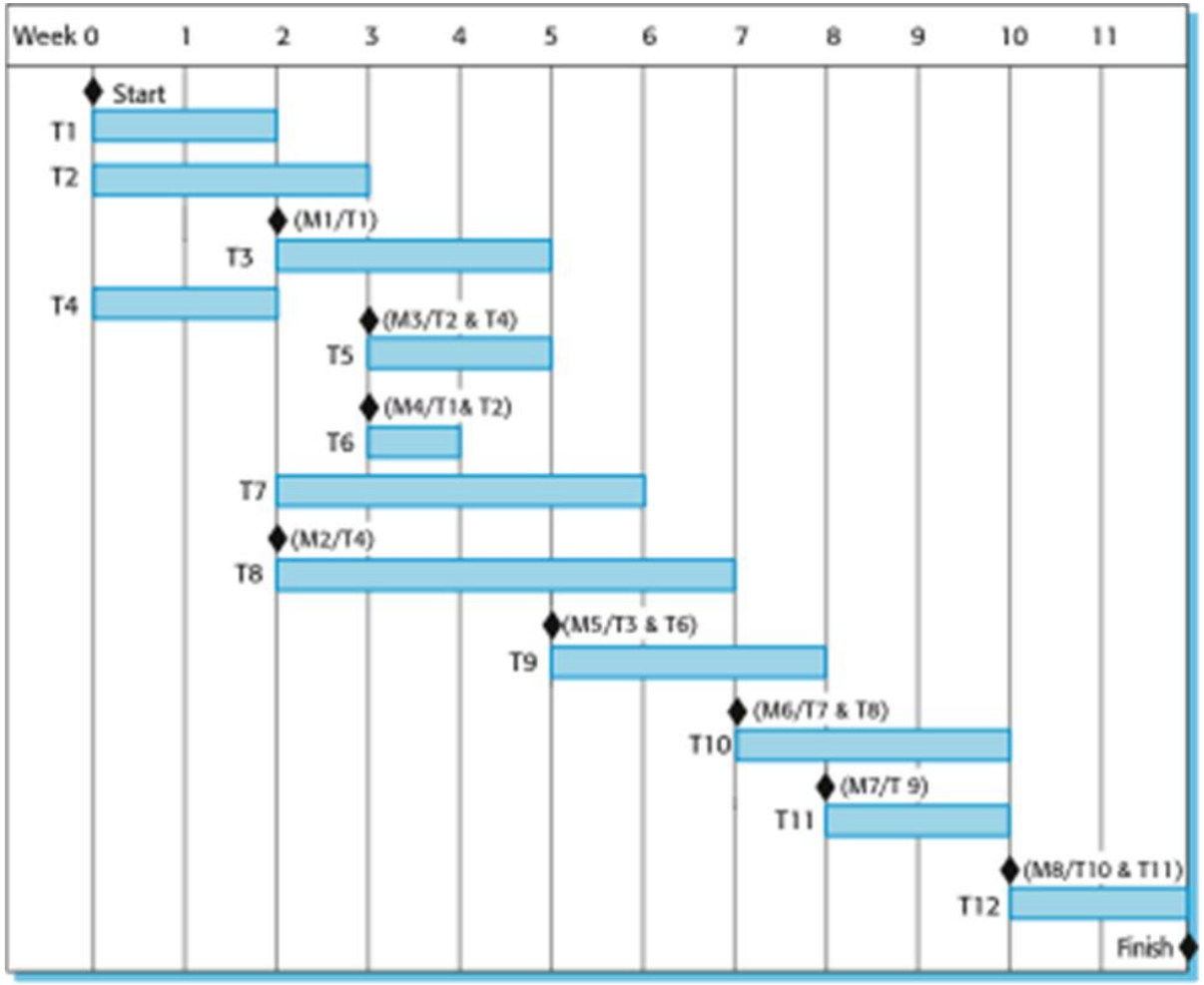

Time (Scheduling) Planning: Gantt Charts

Milestones

- Activities of “zero duration”
- Take no time and consume no resources
- Record significant events or deliverables
  - Major project happenings (component X complete)
  - Funding points (30% of budget expended)
  - Key Dates (e.g. system rollout)
- Serve as reminders to check on overall project status at key points

Time (Scheduling) Planning: Gantt Charts

Gantt Chart: Pragmatic tool-based view (with the ProjectLibre toolset used to show this “toy” example)

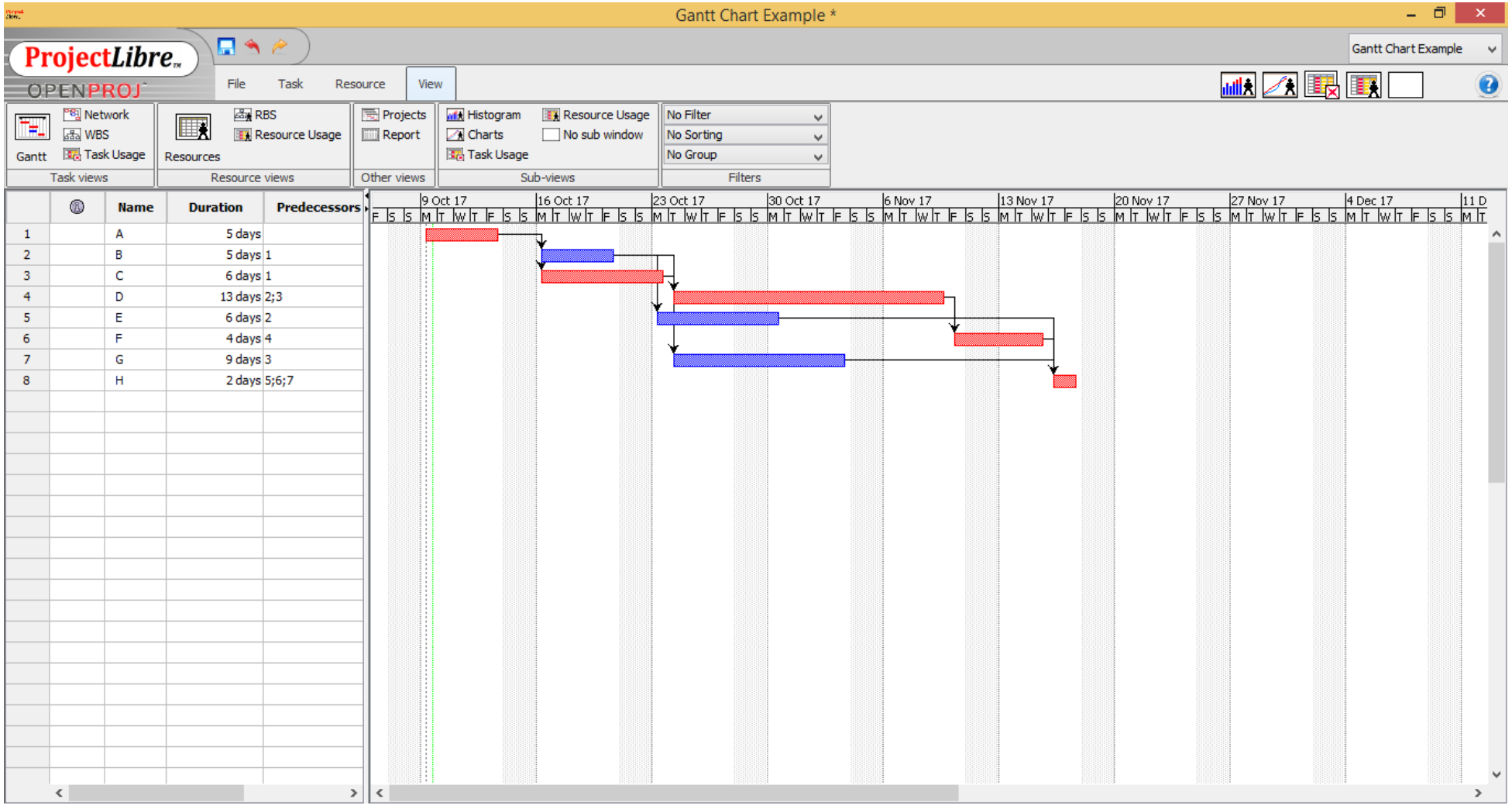

Time (Scheduling) Planning

Common Options typically applied to accelerate (crash) a Project
(all of which have difficulties/drawbacks/ consequences)

1. Improve Productivity of Existing Project Resources

2. Change Working methods employed

3. Reduce Scope (*how about reducing Quality?)*

4. "Fast Track" the Project *(see relevant discussion in Critical Path)*

5. Overtime Work *(is this a good idea?)*

6. Add Resources to the Project Team (*but do not forget the "Brook's Law")*

Time (Scheduling) Planning

Decision and Cost of Accelerating a Project is a Cost-Benefit Trade-off decision.

S = (Crash Cost – Normal Cost) / (Normal Time – Crash Time)

e.g. if for an activity X, the normal (budgeted) costs is 12,000 and is expected to be completed in 5 weeks. If the cost of accelerating the activity to be completed in 3 weeks with a cost of 32,000

S = (32,000 – 12,000) / (5-3) = 10,000